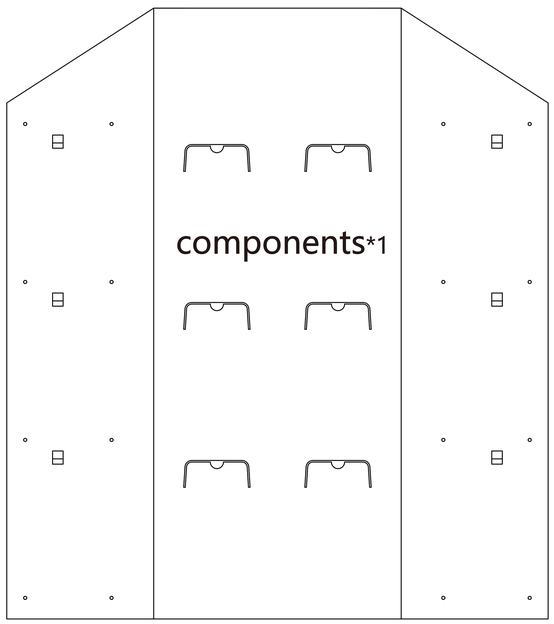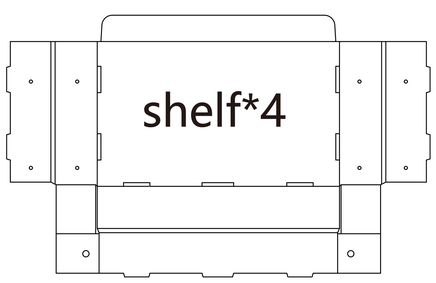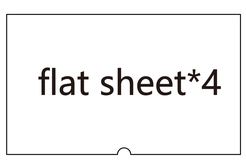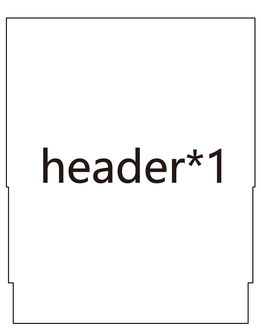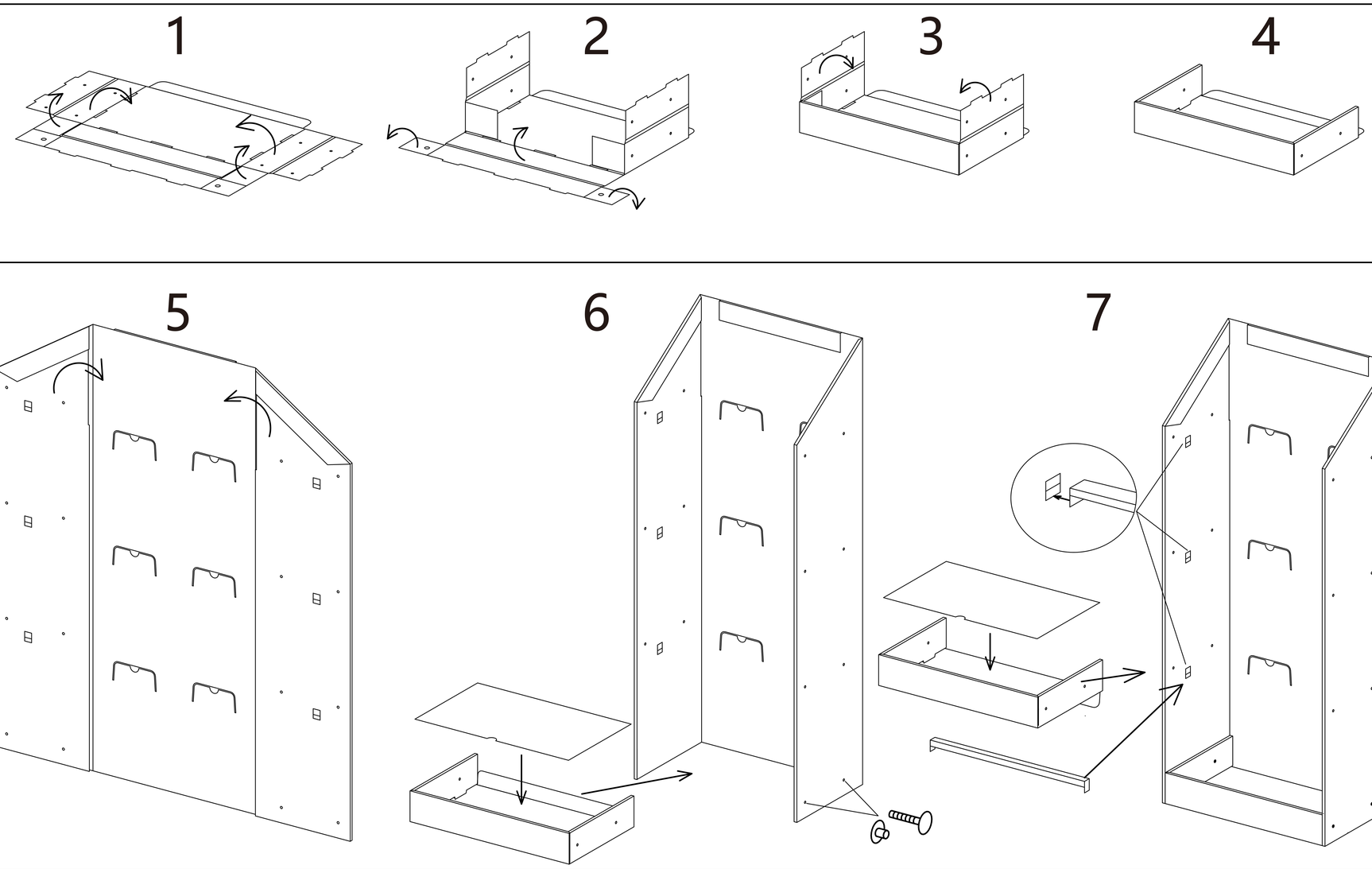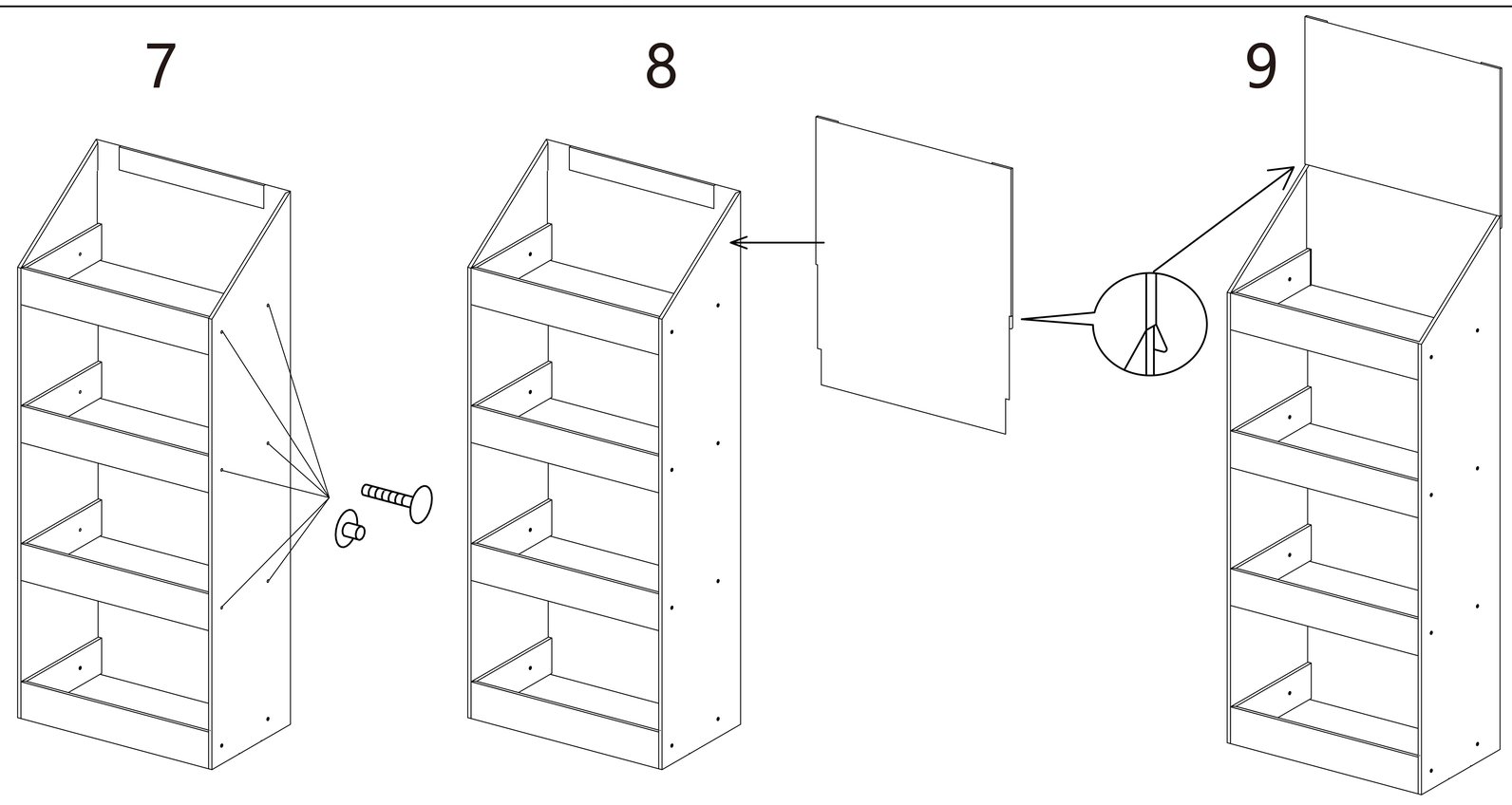ASSEMPLY INSTRUCTION OF ABALONE IN OYSTER SAUCE DISPLAY